ASE 1550nm Broadband Light Sources

(SM, PM, 1528 -1620nm, up to 10W)

DATASHEET

BUY NOW

This series of ASE (Amplified Spontaneous Emission) light sources are single mode light source with a broad emission spectrum and relatively low-coherent. Our unit feature precision feedback control to provide high stability for accuracy measurement applications. The device is based on rare-earth-doped fibers with a pumping laser that is cooled for longevity. ASE 1550 has two wavelength bandwidth configurations: C-band of 1528-1563nm and C+L band of 1528-1620nm. They are the ideal light sources for telecom component testing, FBG sensors, OCT, fiber optic gyroscopes, gas sensors, and fluorescence excitation, as well as for measurement of optical components. We produce both modular for system integration and stand-alone bench-top for ease in uses.

Applications

- Laboratory Uses
- Testing
- Instrumentation

Features

- High Stability
- Low Cost
- Ease to Use

Specifications

Parameter	Min	Typical	Max	Unit
Operation Wavelength	1528		1620	nm
	1528		1563	nm
Output Power	10 *		10000	mW
Polarization Dependence			0.01	dB
Polarization Extinction (PM)	20	26	31	dB
Output Power Stability	0.05	0.1	0.2	dB
Output Isolation			10	dB
Input Voltage (AC)	110	110	220	V
Computer Interface		USB		
Operating Temperature	-5		55	°C
Storage Temperature	-45		85	°C

Notes:

***** This low-power configuration has no USB controller

Legal notices: All product information is believed to be accurate and is subject to change without notice. Information contained herein shall legally bind Agiltron only if it is specifically incorporated into the terms and conditions of a sales agreement. Some specific combinations of options may not be available. The user assumes all risks and liability whatsoever in connection with the use of a product or its application.

Rev 04/10/24

Information contained herein is deemed to be reliable and accurate as of the issue date. Photonwares reserves the right to change the design or specifications at any time without notice.
Agiltron is a registered trademark of Photonwares Corporation in the U.S. and other countries.

ASE 1550nm Broadband Light Sources

(SM, PM, 1528 -1620nm, up to 10W)

DATASHEET

Dimensions (Unit: mm)

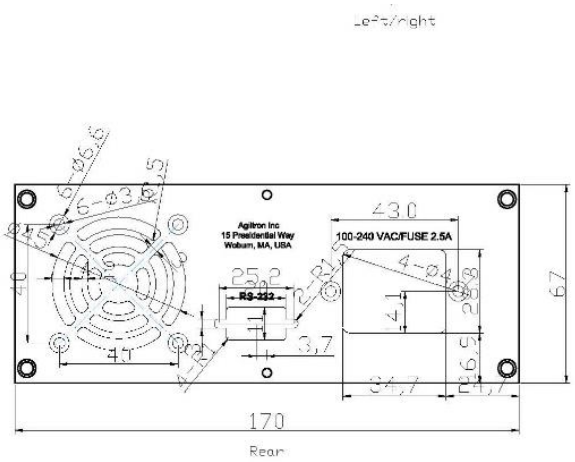

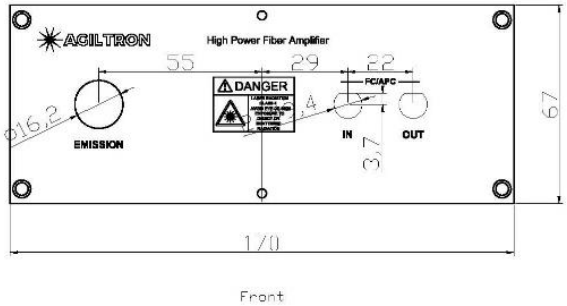

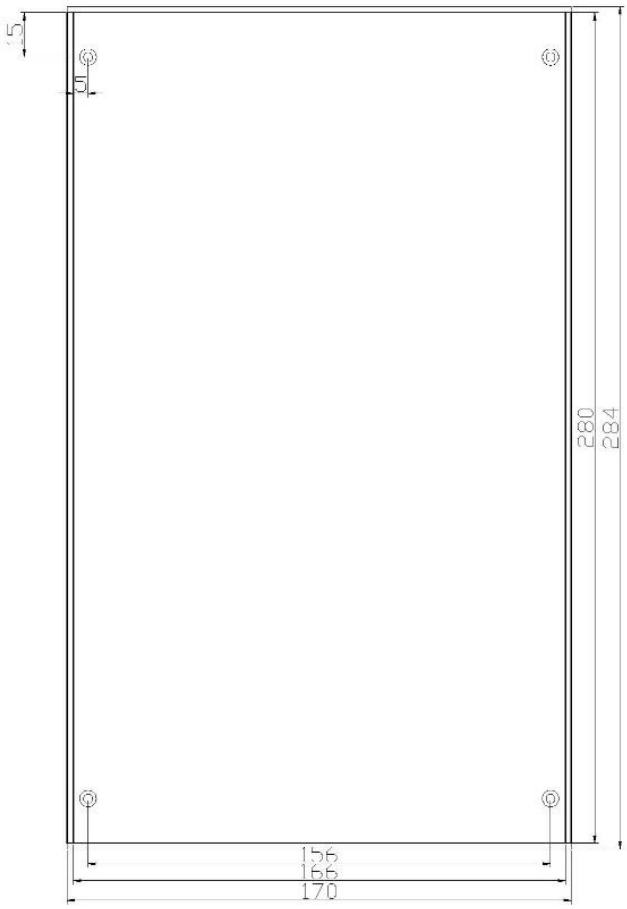

*Product dimensions may change without notice. This is sometimes required for non-standard specifications.

Electrical/Computer Connection

Information contained herein is deemed to be reliable and accurate as of the issue date. Photonwares reserves the right to change the design or specifications at any time without notice.
Agiltron is a registered trademark of Photonwares Corporation in the U.S. and other countries.

ASE 1550nm Broadband Light Sources

(SM, PM, 1528 -1620nm, up to 10W)

DATASHEET

Ordering Information

	☐	☐	☐	☐☐	☐	☐	1	☐
Prefix	**Config**	**Wavelength**	**Polarization**	**Output Power**	**Interface**	**Adapt PCB ****		**Connector**
ASES-	Benchtop = 1 Component = 2	C = C C+L = B Special = 0	Random = 1 Maintaining = 2	10mW * = 10 50mW = 50 100mW = 1A 200mW = 2A 1W = 1W 2.5W = 2W 5.0W = 5W 10W = WW	Non = 1 USB = 2 RS232 = 3 Special = 0	Non = 1 Yes = 2		FC/APC = 3 FC/PC = 2 None = 1 Special = 0

***** This low-cost/low-power configuration has no computer interface, fixed output only

****** This is for component only, the adapt PCB make it easier to control and power up $178 ea

Typical Spectrum

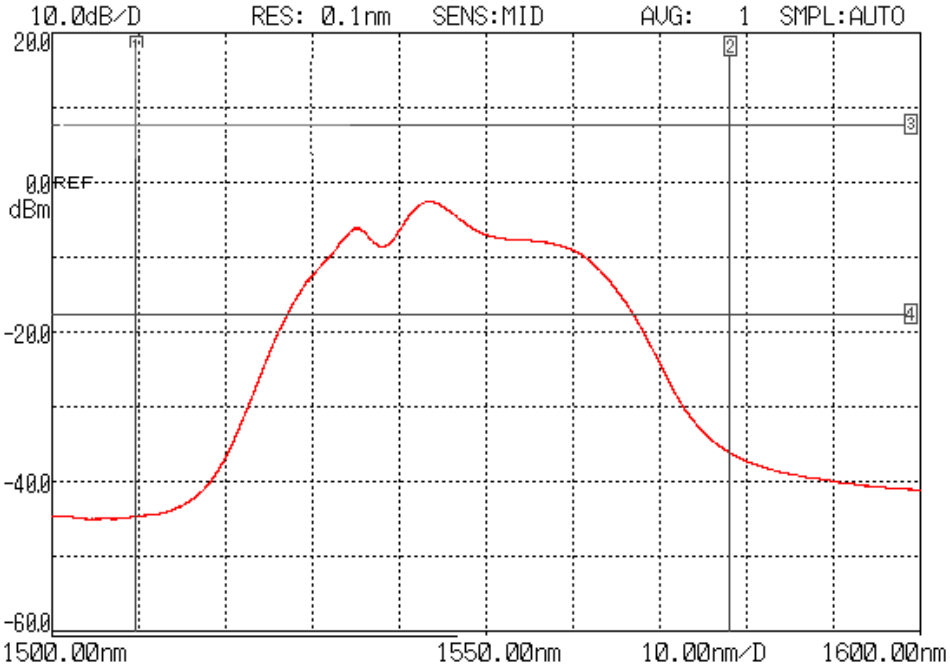

* 200mW C-band ASE

Information contained herein is deemed to be reliable and accurate as of the issue date. Photonwares reserves the right to change the design or specifications at any time without notice.
Agiltron is a registered trademark of Photonwares Corporation in the U.S. and other countries.

Application Notes

Fiber Core Alignment
Note that the minimum attenuation for these devices depends on excellent core-to-core alignment when the connectors are mated. This is crucial for shorter wavelengths with smaller fiber core diameters that can increase the loss of many decibels above the specification if they are not perfectly aligned. Different vendors' connectors may not mate well with each other, especially for angled APC.

Fiber Cleanliness
Fibers with smaller core diameters (<5 µm) must be kept extremely clean, contamination at fiber-fiber interfaces, combined with the high optical power density, can lead to significant optical damage. This type of damage usually requires re-polishing or replacement of the connector.

Maximum Optical Input Power
Due to their small fiber core diameters for short wavelength and high photon energies, the damage thresholds for device is substantially reduced than the common 1550nm fiber. To avoid damage to the exposed fiber end faces and internal components, the optical input power should never exceed 20 mW for wavelengths shorter 650nm. We produce a special version to increase the how handling by expanding the core side at the fiber ends.

Information contained herein is deemed to be reliable and accurate as of the issue date. Photonwares reserves the right to change the design or specifications at any time without notice.
Agiltron is a registered trademark of Photonwares Corporation in the U.S. and other countries.